Programmable Touchscreen Wallplate Control System

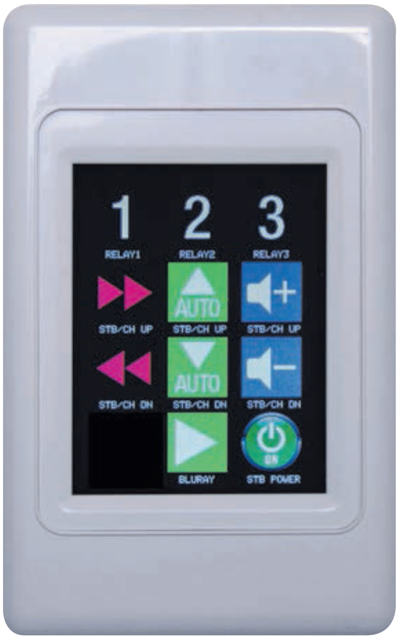
1
2
3
RELAY1
RELAY2
RELAY3
AUTO
AUTO
STB/CH UP
STB/CH UP
STB/CH UP
STB/CH DN
STB/CH DN
STB/CH DN
BLURAY
STB POWER

A 6500

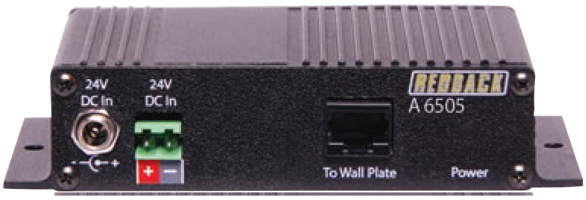
24V DC In
24V DC In
REDBACK
A 6505
To Wall Plate
Power

A 6505

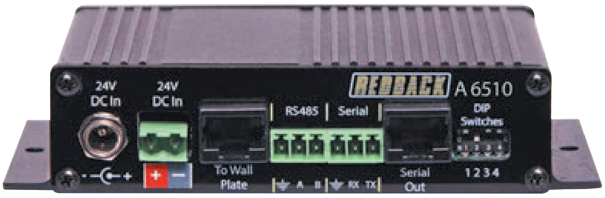
24V DC In
24V DC In
REDBACK
A 6510
RS485
Serial
DIP Switches
To Wall Plate
Serial Out
1 2 3 4

A 6510

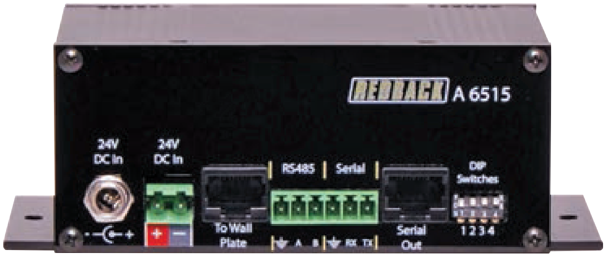
24V DC In
24V DC In
REDBACK
A 6515
RS485
Serial
DIP Switches
To Wall Plate
Serial Out
1 2 3 4

A 6515

Operating Manual

A 6500 Programmable Universal Touchscreen Wallplate
A 6505 3 Relay, 2 Serial, IR Output Hub
A 6510 Distribution Box - 12 Relay Output
A 6515 Distribution Box - 2 Relay Output (High Current)

Redback® Proudly Made In Australia

Distributed by Altronic Distributors Pty. Ltd.
Phone: 1300 780 999 Fax: 1300 790 999 Internet: www.altronics.com.au

IMPORTANT NOTE:

Please read these instructions carefully from front to back prior to installation.
They include important setup instructions.
Failure to follow these instructions may prevent the unit from working as designed.

User manual revision number: 1.0 04/10/2017

CONTENTS

Page

1.0 Overview

1.1 Introduction 3
1.2 Features 3

2.0 Connection Guide

2.1 A 6500 Wall Plate 4
2.2 A 6505 Serial Hub 5
2.3 A 6510 Twelve Relay Distribution Box 6
2.4 A 6515 Two Relay Distribution Box (High current) 7

3.0 System Wiring Configurations

3.1 Standard Serial, IR and Relay Setup 8
3.2 Twelve Relay Setup ,NO Serial or IR 8
3.3 Two Relay (High Current) Setup, NO Serial or IR 9
3.4 Third Party Relay Control 9
3.5 Serial and IR Control with Fifteen Output Relays 10
3.6 Serial and IR Control with Three Low Power and Two High Current Output Relays 11
3.7 Serial and IR Control with Fifteen Low Power and Two High Current Output Relays 12
3.8 A 6500 Default Startup 13
3.9 Lecture Theatre Setup 14

4.0 System Wiring 15

5.0 Troubleshooting 15

6.0 Specifications 16

7.0 Warranty 16

Published by Altronic Distributors
© 2017 Altronic Distributors

1.0 OVERVIEW

1.1 INTRODUCTION

Representing hundreds of hours of research and development by Altronics, this universal touch-screen wallplate is the perfect control system for commercial and domestic automation. It's stylish low profile design lends itself to installation in new modern homes, classrooms, lecture theatres or corporate boardrooms. The LCD panel can be configured from 1 to 12 buttons, which can be individually labelled. Configuration is performed using the supplied software, which is then transferred to the plate via SD card. A library of button icons is included and can be customised by the user if required.
Each button can be programmed for either serial (with hex code or ASCII commands), IR, or relay control, making it ideal for controlling just about any electronic device.
For IR applications the plate can learn and capture IR strings from almost any remote control.
User generated macros can be created consisting of multiple commands in a single button press. This is ideal for performing multiple tasks at once ie: turn on projector, turn on amplifier, turn off lights, drop down projector screen etc. Wall plate fits into a standard electrical wallbox for ease of installation.

1.2 FEATURES

A 6500 Programmable Wallplate

- User programmable buttons with customisable icons
- Inbuilt icon library for commonly used buttons
- Multi-command macros
- IR learningn facility
- SD card configuration upload
- Dual cover wallplate to suit existing decor
- Single U/UTP Cat5 cable connection
- Easy to program
- 10 Year Warranty (Cracked or broken screen excluded)
- Australian Designed and Manufactured

A 6505 Serial Hub

- Dual RS-232 or RS-485 serial outputs
- Infra-red control output
- 3 output relays (voltage free N/C & N/O contacts) 2A max
- U/UTP Cat5 cable connection to A 6500 wallplate
- 24V DC Input
- 10 Year Warranty
- Australian Designed and Manufactured

A 6510 12 Relay Distribution Box

- RS-232 or RS-485 serial inputs
- 12 output relays (voltage free N/O contacts) 1A max
- 24V DC Input
- 10 Year Warranty
- Australian Designed and Manufactured

A 6515 2 Relay High Power Distribution Box

- RS-232 or RS-485 serial inputs
- 2 output relays (voltage free N/C & N/O contacts) 16A max
- 24V DC Input
- 10 Year Warranty
- Australian Designed and Manufactured

2.0 CONNECTION GUIDE

2.1 A 6500 WALL PLATE CONNECTION GUIDE

Fig 2.1a shows the layout of the front of the A 6500 wall plate with the cover removed.

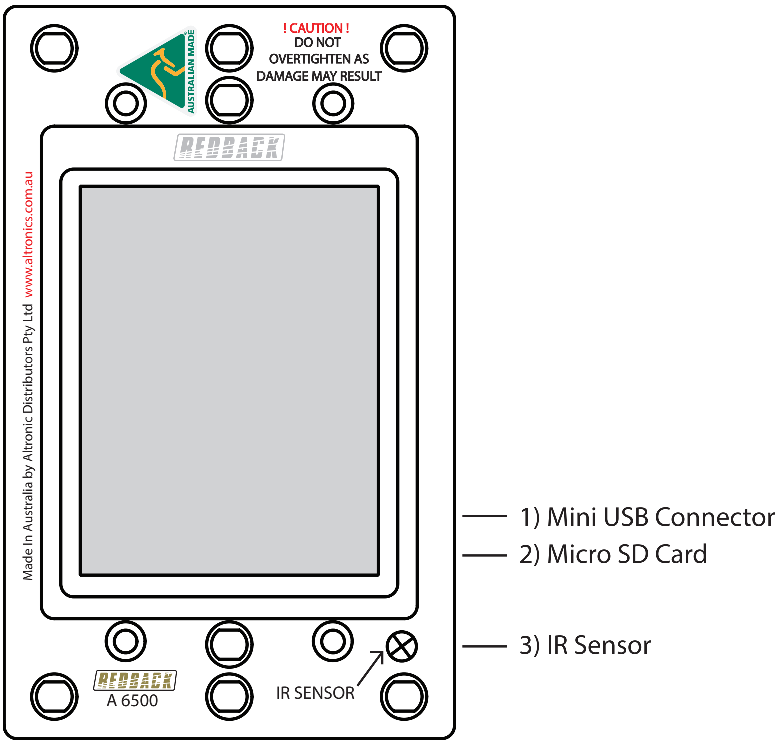
! CAUTION !
DO NOT OVERTIGHTEN AS DAMAGE MAY RESULT
AUSTRALIAN MADE
REDBACK
Made In Australia by Altronic Distributors Pty Ltd www.altronics.com.au
1) Mini USB Connector
2) Micro SD Card
3) IR Sensor
REDBACK
A 6500
IR SENSOR

Fig 2.1a

The location of the IR sensor, Micro SD card and USB connector are shown.

1 **Micro USB Connector**
This connector is for the connection of a USB keyboard for learning IR codes.

2 **Micro SD Card**
The SD card is use to store all the icon and button configuration information.
(Note: The Micro SD Card is inserted with the contacts facing the front of the wall plate).

3 **IR Sensor**
This sensor is used to learn IR codes.

Fig 2.1b shows the layout of the rear of the A 6500 wall plate.

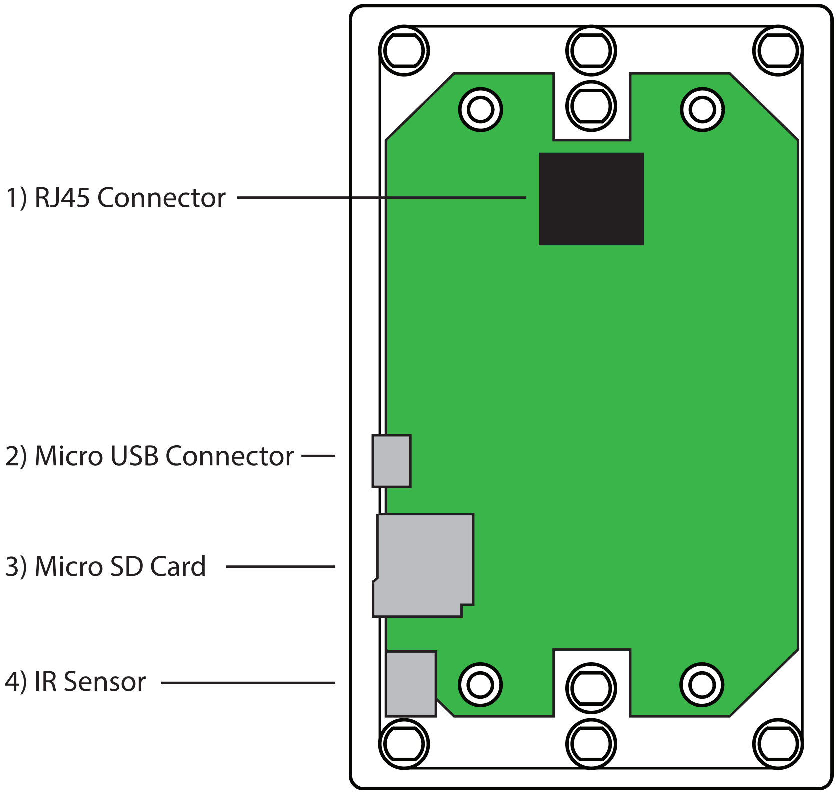
1) RJ45 Connector
2) Micro USB Connector
3) Micro SD Card
4) IR Sensor

Fig 2.1b

The location of the RJ45 Connector, IR sensor, Micro SD card and USB connector are shown.

1 **RJ45 Connector**
This is used for the connection between the wallplate and Serial Hub or Distribution boxes. Connection is made using Cat5/6 cable to a maximum distance of 50m.

2 **Micro USB Connector**
This connector is for the connection of a USB keyboard for learning IR codes.

3 **Micro SD Card**
The SD card is use to store all the icon and button configuration information.
(Note: The Micro SD Card is inserted with the contacts facing the front of the wall plate).

4 **IR Sensor**
This sensor is used to learn IR codes.

2.2 A 6505 SERIAL HUB CONNECTION GUIDE

Fig 2.2a shows the layout of the front of the A 6505 Serial Hub.

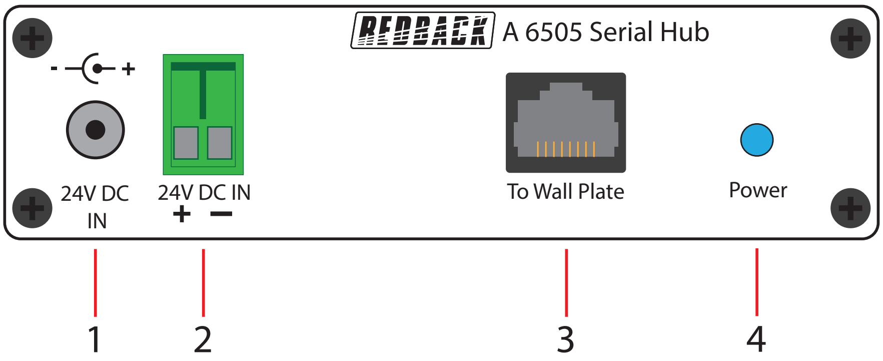

Fig 2.2a

1 **24V DC input**
Connects to a 24V DC Plugpack with a 2.1mm Jack (Please observe the polarity, centre positive).

2 **24V DC Input**
Connects to a 24V DC source via a euro block (Please observe the polarity).

3 **RJ45 interface**
This RJ45 port is for connection to the A 6500 wall plate.

4 **Power LED**
Indicates the unit has power.

Fig 2.2b shows the layout of the rear of the A 6505 Serial Hub.

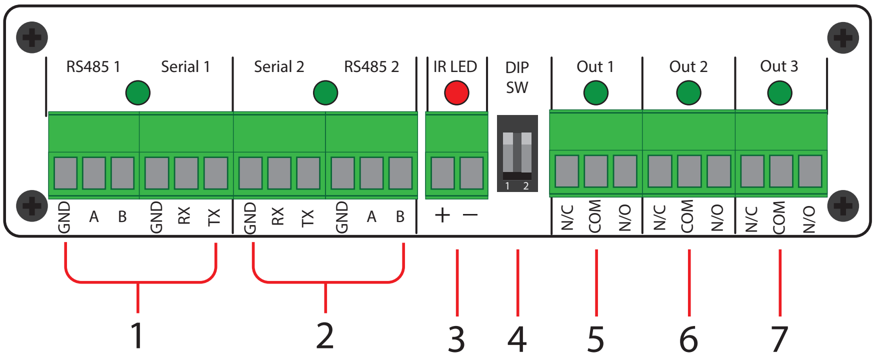

Fig 2.2b

1 **Serial Output 1**
This output is configurable via the software as either an RS232 or RS485 output. The LED will illuminate while data is being transmitted. Follow standard RS232 or RS485 wiring when connecting these terminals.

2 **Serial Output 2**
This output is configurable via the software as either an RS232 or RS485 output. The LED will illuminate while data is being transmitted. Follow standard RS232 or RS485 wiring when connecting these terminals.

3 **IR Output**
These terminals are provided for connection to IR repeaters. The LED above the terminals illuminate while the output is active.

4 **DIP Switches**
DIP 1 changes the IR LED voltage output, ON = 5V Direct, OFF = 5V @20mA to standard IR LED. DIP 2 is not used

5 **Output 1**
This output provides a voltage free output with a normally open and normally closed contact. This is configured via the software as the relay 1 output. (The maximum current rating of these contacts is 2A.) The LED above the terminals illuminate while the output is active.

6 **Output 2**
This output provides a voltage free output with a normally open and normally closed contact. This is configured via the software as the relay 2 output. (The maximum current rating of these contacts is 2A.) The LED above the terminals illuminate while the output is active.

7 **Output 3**
This output provides a voltage free output with a normally open and normally closed contact. This is configured via the software as the relay 3 output. (The maximum current rating of these contacts is 2A.) The LED above the terminals illuminate while the output is active.

2.3 A 6510 12 RELAY DISTRIBUTION BOX CONNECTION GUIDE

Fig 2.3a shows the layout of the front of the A 6510 12 Relay Distribution Box.

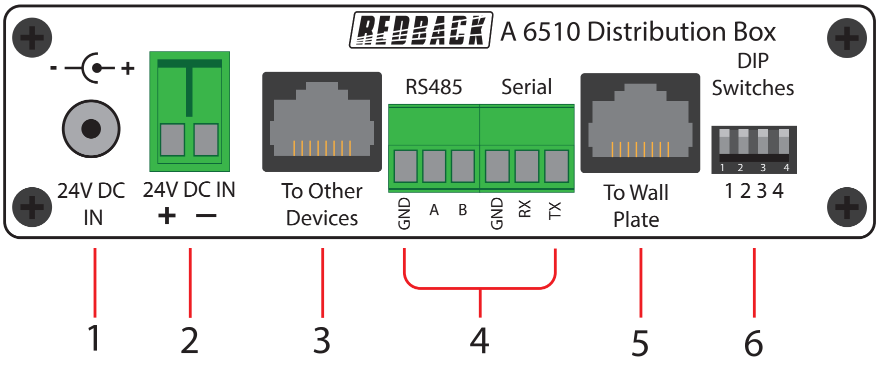
REDBACK
A 6510 Distribution Box
- +
24V DC IN
24V DC IN
+ –
To Other Devices
RS485
Serial
GND
A
B
GND
RX
TX
To Wall Plate
DIP Switches
1 2 3 4
1 2 3 4
1
2
3
4
5
6

Fig 2.3a

1 **24V DC input**
Connects to a 24V DC Plugpack with a 2.1mm Jack (Please observe the polarity, centre positive).

2 **24V DC Input**
Connects to a 24V DC source via a euro block (Please observe the polarity).

3 **RJ45 interface**
This RJ45 port is for connection to other Redback® compatible devices.

4 **Serial Input**
This input takes either an RS232 or RS485 signal. This can be connected to one of the serial outputs of the A 6505 or to a third party system. Follow standard RS232 or RS485 wiring when connecting these terminals.

5 **RJ45 interface**
This RJ45 port is for connection to the A 6500 wall plate.

6 **DIP Switches**
1 ON: Accept serial codes through RS485 input.
2 ON: Accept serial codes through RS232 input.
3 ON: Accept serial codes from wall plate.
4: Not Used
NOTE: Only one of the DIP switches 1-3 can be on at any time.

Fig 2.3b shows the layout of the rear of the A 6510 12 Relay Distribution Box.

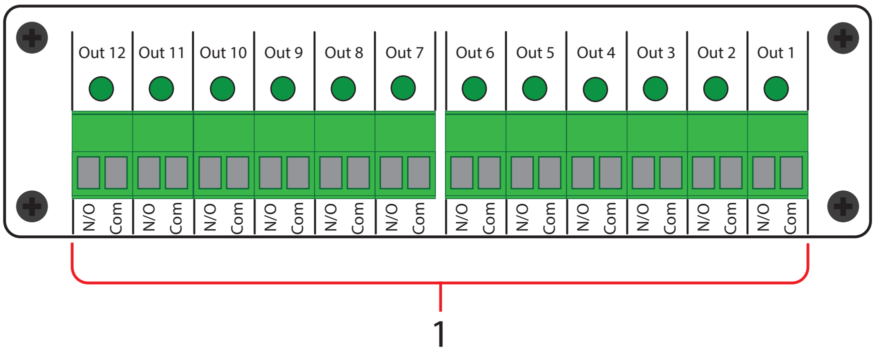
Out 12
Out 11
Out 10
Out 9
Out 8
Out 7
Out 6
Out 5
Out 4
Out 3
Out 2
Out 1
N/O Com N/O Com N/O Com N/O Com N/O Com N/O Com N/O Com N/O Com N/O Com N/O Com N/O Com N/O Com
1

Fig 2.3b

1 **Outputs 1-12**
These outputs provide a voltage free output with a set of normally open contacts. They are configured via the software as the relay 1-12 outputs (The maximum current rating of these contacts is 1A). The LED's above the terminals illuminate while the corresponding output is active.

2.4 A 6515 TWO RELAY DISTRIBUTION BOX (HIGH CURRENT) CONNECTION GUIDE

Fig 2.4a shows the layout of the front of the A 6515 Relay Distribution Box.

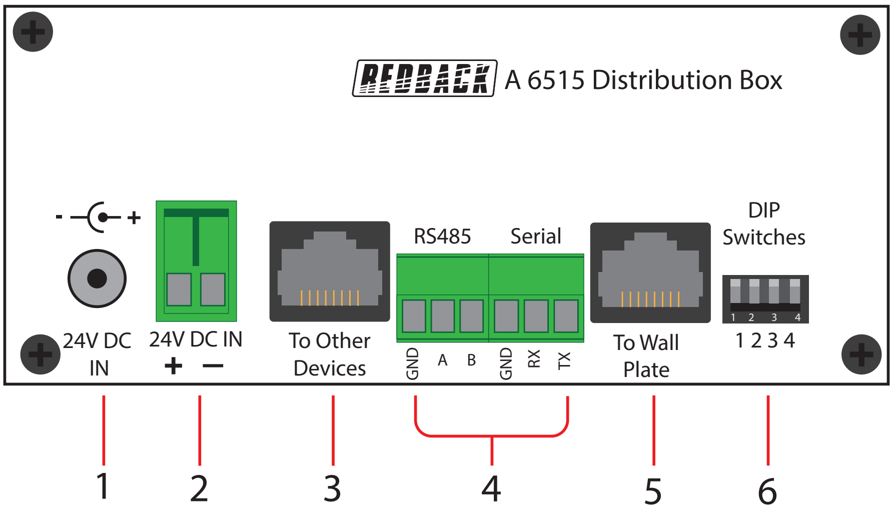

Fig 2.4a

1 **24V DC input**
Connects to a 24V DC Plugpack with a 2.1mm Jack (Please observe the polarity, centre positive).

2 **24V DC Input**
Connects to a 24V DC source via a euro block (Please observe the polarity).

3 **RJ45 interface**
This RJ45 port is for connection to other Redback® compatible devices.

4 **Serial Input**
This input takes either an RS232 or RS485 signal. This can be connected to one of the serial outputs of the A 6505 or to a third party system. Follow standard RS232 or RS485 wiring when connecting these terminals.

5 **RJ45 interface**
This RJ45 port is for connection to the A 6500 wall plate.

6 **DIP Switches**
1 ON: Accept serial codes through RS485 input.
2 ON: Accept serial codes through RS232 input.
3 ON: Accept serial codes from wall plate.
4: Not Used
NOTE: Only one of the DIP switches 1-3 can be on at any time.

Fig 2.4b shows the layout of the rear of the A 6515 Relay Distribution Box.

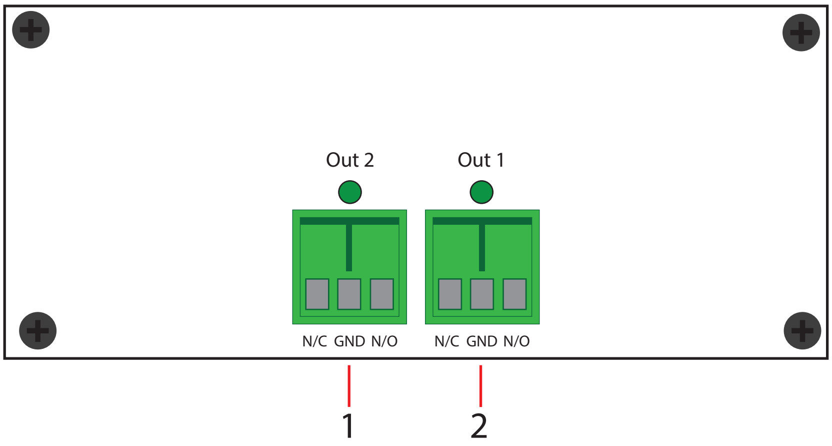

Fig 2.4b

1 **Output 1**
This output provides a voltage free output with a normally open and normally closed contact. This is configured via the software as the relay 13 output. (The maximum current rating of these contacts is 16A.) The LED above the terminals illuminate while the output is active.

2 **Output 2**
This output provides a voltage free output with a normally open and normally closed contact. This is configured via the software as the relay 14 output. (The maximum current rating of these contacts is 16A.) The LED above the terminals illuminate while the output is active.

3.0 SYSTEM WIRING CONFIGURATIONS

The A 6500 Wall Plate can be configured to operate with either the A 6505, A 6510 or A 6515 or a combination of these.

3.1 STANDARD SERIAL, IR and RELAY SETUP

Shown below is the standard setup with the A 6500 Wall Plate connected to the A 6505 Serial Hub via a CAT5e/6 cable. 24V DC power is connected to the A 6505 by a plugpack with a 2.1mm jack or through the euro block terminals. The A 6505 in turn powers the A 6500 Wall Plate through the Cat5e/6 cable.
The A 6505 Serial Hub can then be connected to up to two RS232 or RS485 controlled devices. IR control of multiple devices is available through the IR repeater output and a total of three relay outputs enable control of devices with a closing contact. The relay contacts are rated at 2A maximum and a set of normally open and normally closed contacts are available for each relay.

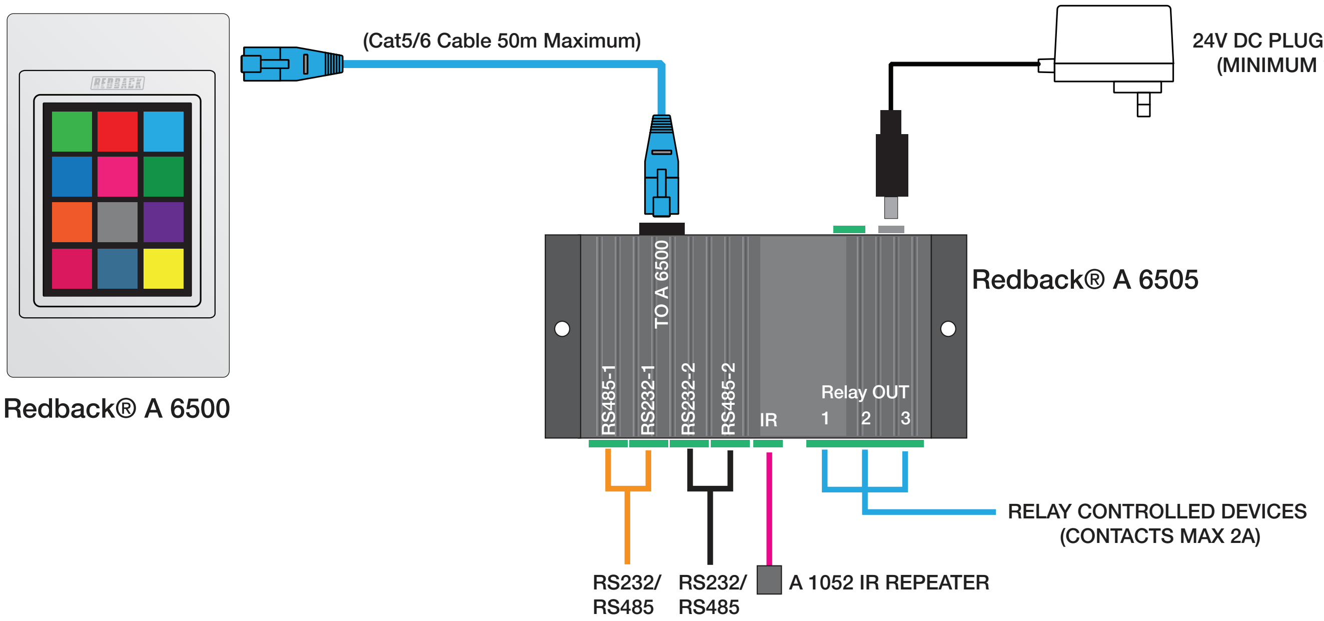
(Cat5/6 Cable 50m Maximum)
24V DC PLUGPACK
(MINIMUM 1A)
Redback® A 6505
TO A 6500
RS485-1
RS232-1
RS232-2
RS485-2
IR
Relay OUT
1
2
3
Redback® A 6500
RELAY CONTROLLED DEVICES
(CONTACTS MAX 2A)
RS232/
RS485
RS232/
RS485
A 1052 IR REPEATER

Fig 3.1

3.2 TWELVE RELAY SETUP (NO SERIAL or IR)

The simple setup provides up to twelve output relays for switching, with no serial or IR outputs. The A 6500 Wall Plate is connected to the A 6510 via a CAT5e/6 cable. 24V DC power is connected to the A 6505 by a plugpack with a 2.1mm jack or through the euro block terminals. The A 6510 in turn powers the A 6500 Wall Plate through the Cat5e/6 cable. The relay contacts are rated at a maximum of 1A with a set of normally open contacts only.

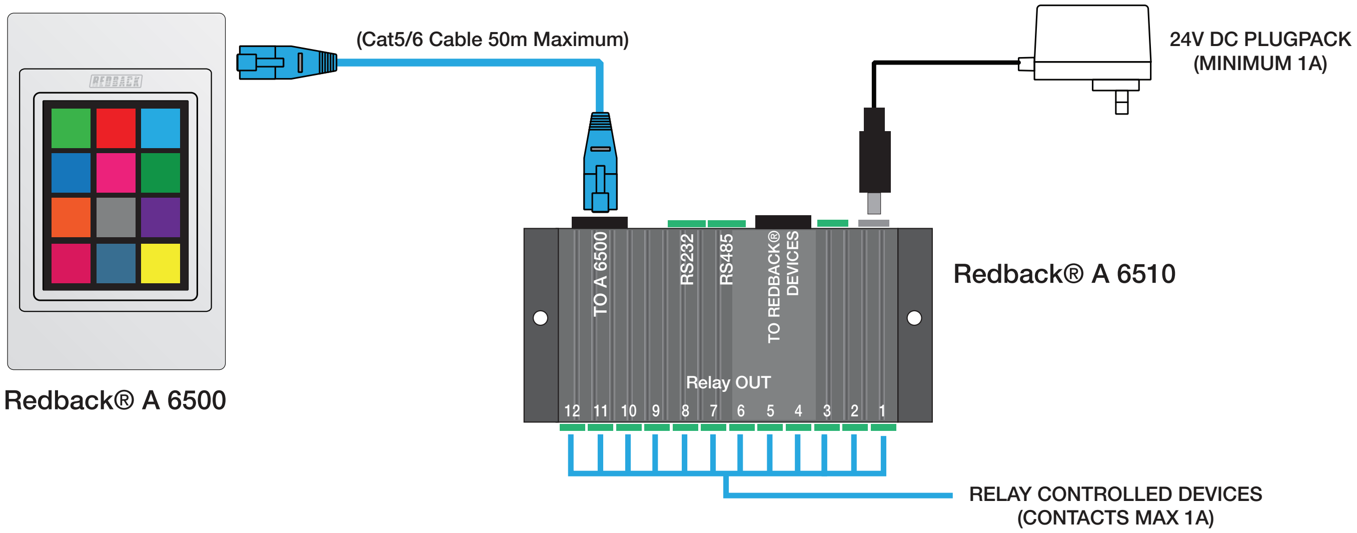
(Cat5/6 Cable 50m Maximum)
24V DC PLUGPACK
(MINIMUM 1A)
Redback® A 6510
TO A 6500
RS232
RS485
TO REDBACK® DEVICES
Relay OUT
12
11
10
9
8
7
6
5
4
3
2
1
Redback® A 6500
RELAY CONTROLLED DEVICES
(CONTACTS MAX 1A)

Fig 3.2

3.3 TWO RELAY SETUP (HIGH CURRENT, NO SERIAL or IR)

The high power setup provides up to two output relays for switching, with no serial or IR outputs. The relays are high current outputs rated at 16A maximum and a set of normally open and normally closed contacts are available for each relay.

The A 6500 Wall Plate is connected to the A 6515 via a CAT5e/6 cable. 24V DC power is connected to the A 6505 by a plugpack with a 2.1mm jack or through the euro block terminals. The A 6515 in turn powers the A 6500 Wall Plate through the Cat5e/6 cable.

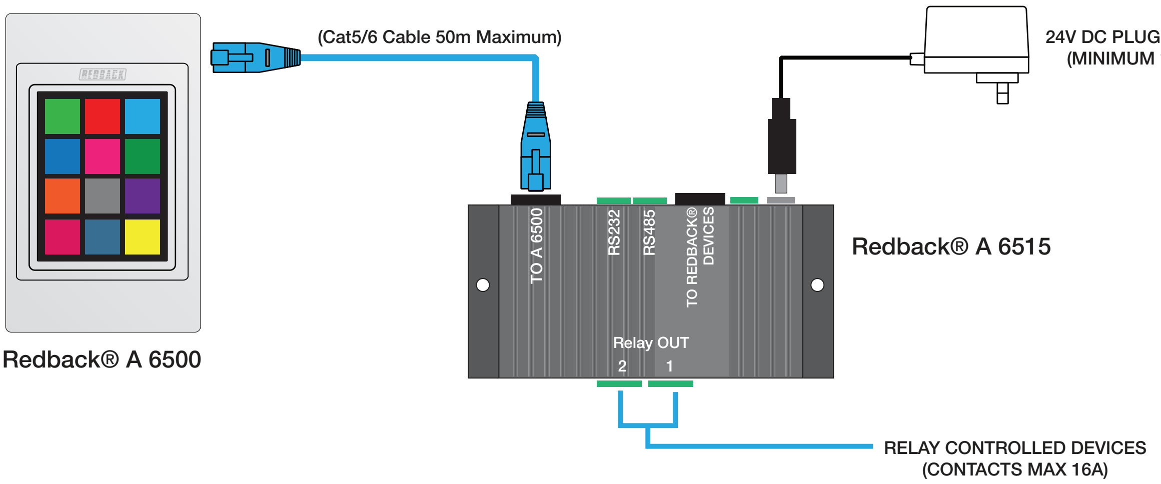
(Cat5/6 Cable 50m Maximum)
24V DC PLUGPACK
(MINIMUM 1A)
TO A 6500
RS232
RS485
TO REDBACK® DEVICES
Redback® A 6515
Relay OUT
2
1
Redback® A 6500
RELAY CONTROLLED DEVICES
(CONTACTS MAX 16A)

Fig 3.3

3.4 THIRD PARTY RELAY CONTROL

The A 6510 and A 6515 relay distribution boxes can both be controlled by a third party device with either an RS232 or RS485 output, via serial commands which are described in the supplied programming manual.

NOTE: The A 6510 and A 6515 will receive serial only. They do not transmit any serial data.

See section 4.0 for serial wiring details.

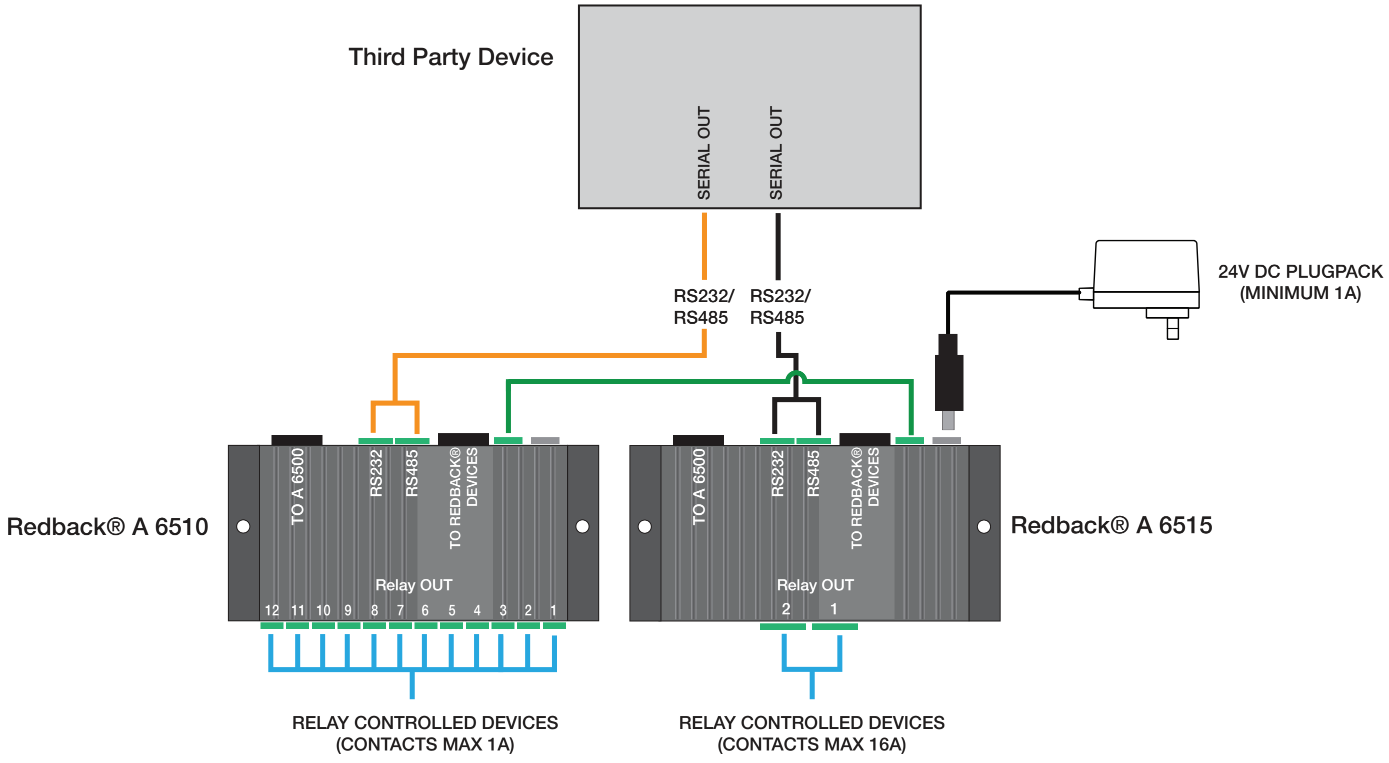
Third Party Device
SERIAL OUT
SERIAL OUT
RS232/
RS485
RS232/
RS485
24V DC PLUGPACK
(MINIMUM 1A)
Redback® A 6510
TO A 6500
RS232
RS485
TO REDBACK® DEVICES
Relay OUT
12 11 10 9 8 7 6 5 4 3 2 1
Redback® A 6515
TO A 6500
RS232
RS485
TO REDBACK® DEVICES
Relay OUT
2 1
RELAY CONTROLLED DEVICES
(CONTACTS MAX 1A)
RELAY CONTROLLED DEVICES
(CONTACTS MAX 16A)

Fig 3.4

3.5 SERIAL and IR CONTROL with FIFTEEN OUTPUT RELAYS

This configuration expands the standard setup to provide serial and IR control with up to 15 output relays. The A 6500 Wall Plate is connected to the A 6505 Serial Hub via a CAT5e/6 cable. 24V DC power is connected to the A 6505 by a plugpack with a 2.1mm jack or through the euro block terminals. The A 6505 in turn powers the A 6500 Wall Plate through the Cat5e/6 cable and powers the A 6510 by running a cable from the 24DC In terminals of the A 6505 to the A 6510 24V In terminals.

The A 6505 Serial Hub can then be connected to up to two RS232 or RS485 controlled devices. IR control of multiple devices is available through the IR repeater output and a total of fifteen relay outputs enable control of devices with a closing contact. The relay contacts on the A 6505 are rated at 2A maximum and a set of normally open and normally closed contacts are available for each relay. The relay contacts on the A 6510 are rated at 1A maximum with normally open contacts only.

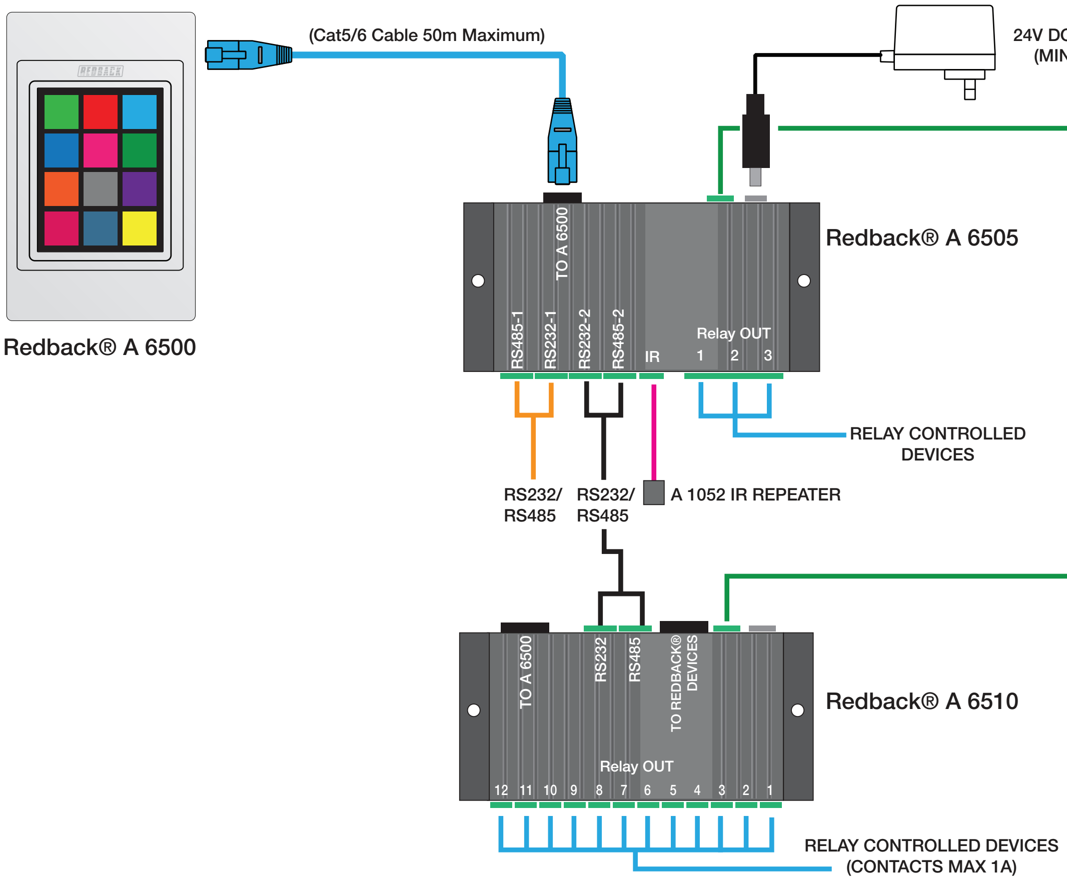
(Cat5/6 Cable 50m Maximum)
24V DC PLUGPACK
(MINIMUM 1A)
Redback® A 6500
Redback® A 6505
TO A 6500
RS485-1
RS232-1
RS232-2
RS485-2
IR
Relay OUT
1
2
3
RELAY CONTROLLED
DEVICES
RS232/
RS485
RS232/
RS485
A 1052 IR REPEATER
Redback® A 6510
TO A 6500
RS232
RS485
TO REDBACK®
DEVICES
Relay OUT
12
11
10
9
8
7
6
5
4
3
2
1
RELAY CONTROLLED DEVICES
(CONTACTS MAX 1A)

Fig 3.5

3.6 SERIAL and IR CONTROL with THREE LOW POWER and TWO HIGH CURRENT RELAYS

This configuration expands the standard setup to provide serial and IR control with 3 low power output relays and two high current output relays.

The A 6500 Wall Plate is connected to the A 6505 Serial Hub via a CAT5e/6 cable. 24V DC power is connected to the A6505 by a plugpack with a 2.1mm jack or through the euro block terminals. The A 6505 in turn powers the A 6500 Wall Plate through the Cat5e/6 cable and powers the A 6515 by running a cable from the 24DC In terminals of the A 6505 to the A 6515 24V In terminals.

The A 6505 Serial Hub can then be connected to up to two RS232 or RS485 controlled devices. IR control of multiple devices is available through the IR repeater output and a total of five relay outputs enable control of devices with a closing contact. The relay contacts on the A 6505 are rated at 2A maximum and a set of normally open and normally closed contacts are available for each relay. The relay contacts on the A 6515 are rated at 16A maximum with a set of normally open and normally closed contacts for each relay.

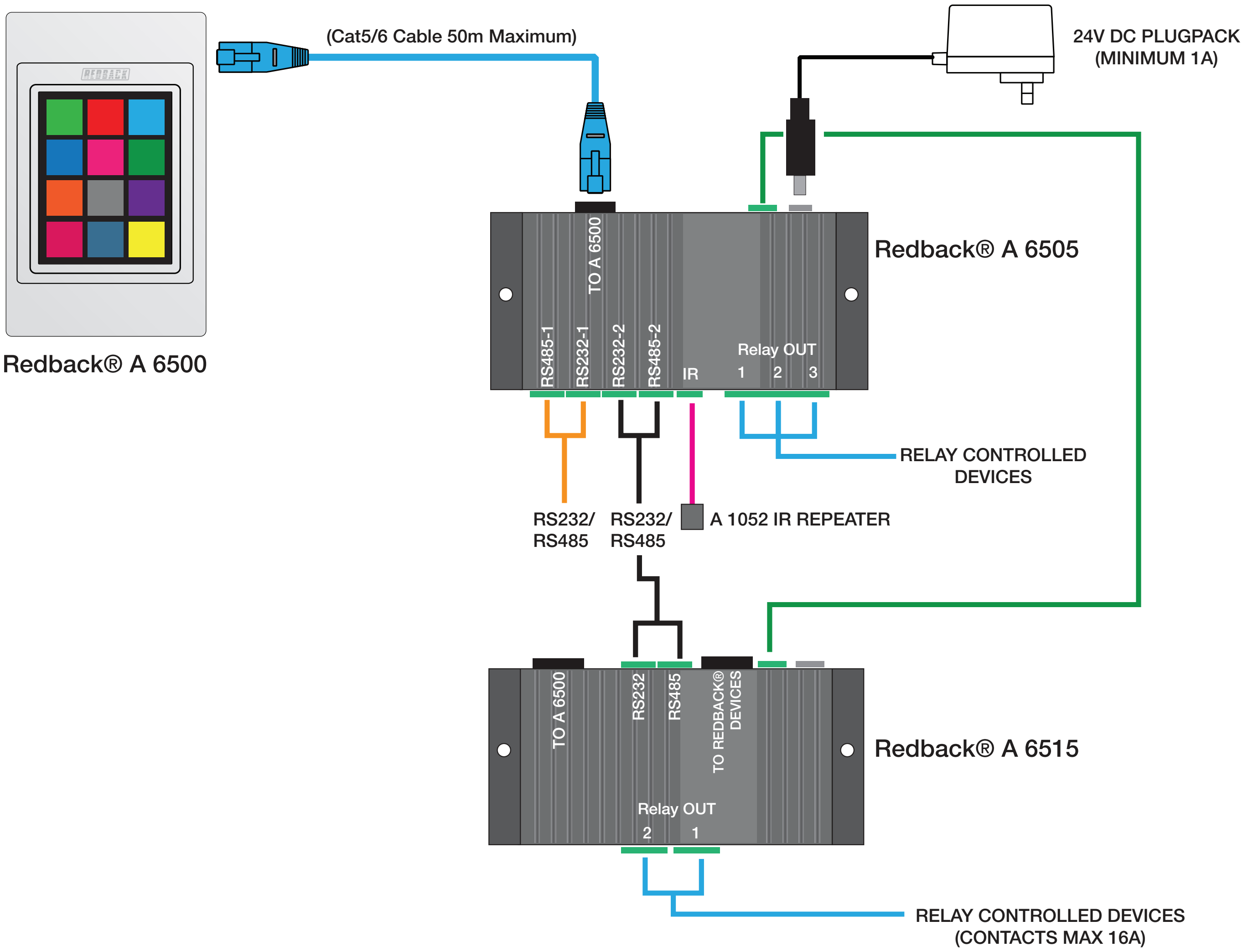
(Cat5/6 Cable 50m Maximum)
24V DC PLUGPACK (MINIMUM 1A)
REDBACK
Redback® A 6500
Redback® A 6505
TO A 6500
RS485-1
RS232-1
RS232-2
RS485-2
IR
Relay OUT
1
2
3
RELAY CONTROLLED DEVICES
RS232/ RS485
RS232/ RS485
A 1052 IR REPEATER
Redback® A 6515
TO A 6500
RS232
RS485
TO REDBACK® DEVICES
Relay OUT
2
1
RELAY CONTROLLED DEVICES (CONTACTS MAX 16A)

Fig 3.6

3.7 SERIAL and IR CONTROL with FIFTEEN LOW POWER and TWO HIGH CURRENT RELAYS

This configuration expands the standard setup to provide serial and IR control with 15 low power output relays and two high current output relays.

The A 6500 Wall Plate is connected to the A 6505 Serial Hub via a CAT5e/6 cable. 24V DC power is connected to the A 6505 by a plugpack with a 2.1mm jack or through the euro block terminals. The A 6505 in turn powers the A 6500 Wall Plate through the Cat5e/6 cable and powers the A 6510 and A 6515 by running a cable from the 24DC In terminals of the A 6505 to the 24V In terminals of the A 6510 and A 6515.

The A 6505 Serial Hub can then be connected to up to two RS232 or RS485 controlled devices. IR control of multiple devices is available through the IR repeater output and a total of seventeen relay outputs enable control of devices with a closing contact. The relay contacts on the A 6505 are rated at 2A maximum and a set of normally open and normally closed contacts are available for each relay. The relay contacts on the A 6510 are rated at 1A maximum with normally open contacts only. The relay contacts on the A 6515 are rated at 16A maximum with a set of normally open and normally closed contacts for each relay.

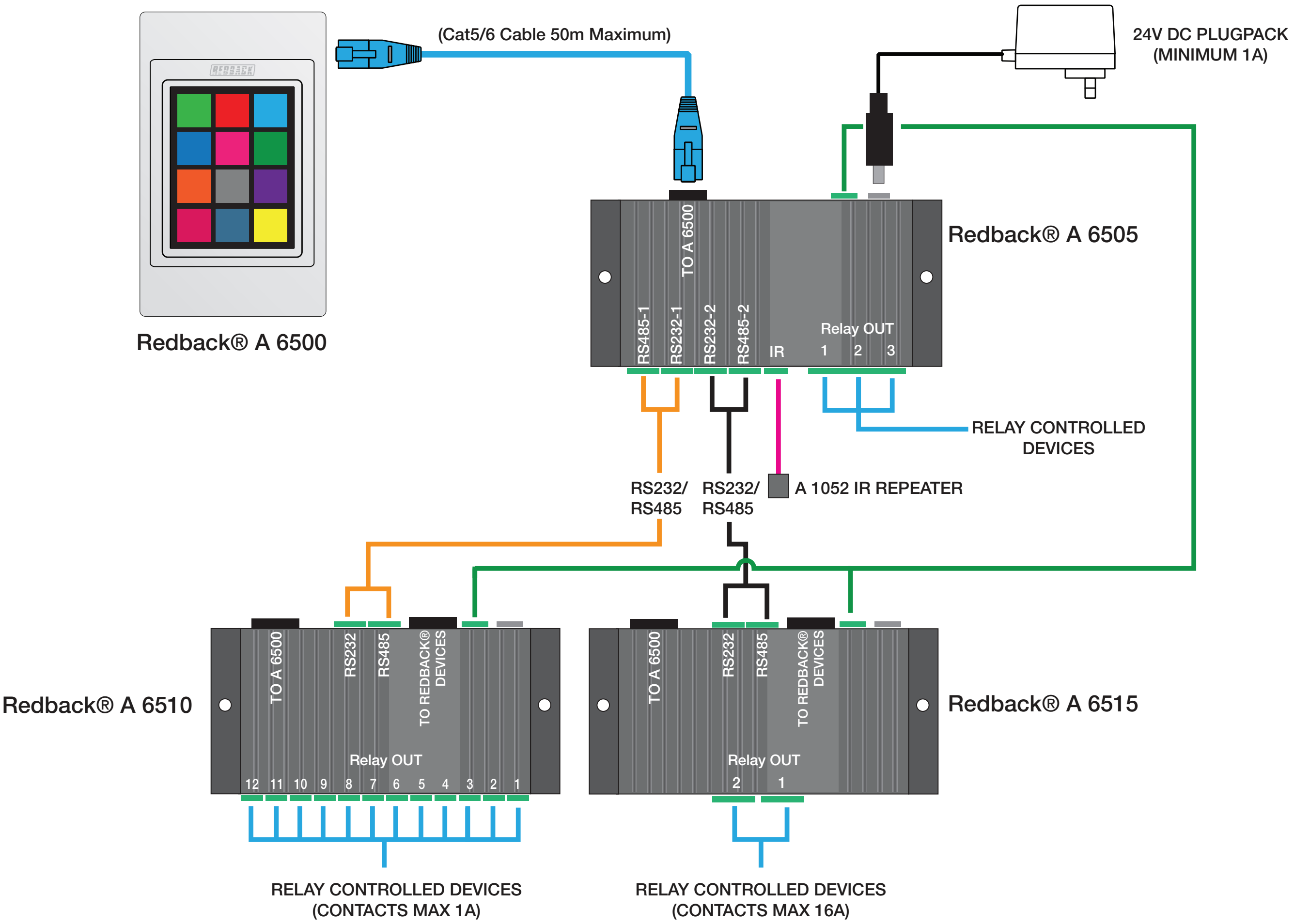
(Cat5/6 Cable 50m Maximum)
24V DC PLUGPACK
(MINIMUM 1A)
Redback® A 6500
Redback® A 6505
TO A 6500
RS485-1
RS232-1
RS232-2
RS485-2
IR
Relay OUT
1
2
3
RELAY CONTROLLED
DEVICES
RS232/
RS485
RS232/
RS485
A 1052 IR REPEATER
Redback® A 6510
TO A 6500
RS232
RS485
TO REDBACK®
DEVICES
Relay OUT
12
11
10
9
8
7
6
5
4
3
2
1
Redback® A 6515
TO A 6500
RS232
RS485
TO REDBACK®
DEVICES
Relay OUT
2
1
RELAY CONTROLLED DEVICES
(CONTACTS MAX 1A)
RELAY CONTROLLED DEVICES
(CONTACTS MAX 16A)

Fig 3.7

3.8 A 6500 FIRST POWER UP

THe A 6500 Wall Plate is connected to the A 6505 as shown in figure 3.8. Once power is applied to the A 6505 Serial Hub, the A 6500 Wall Plate will power up a couple of seconds later. The screen will briefly display the software revision and some dignostic information, before displaying the default testing screen which displays six smiley face icons. These icons represent buttons and are labelled “SERIAL 1”, “SERIAL 2”, “IR LG POW”, “RELAY 1”, “RELAY 2” and “RELAY 3”.

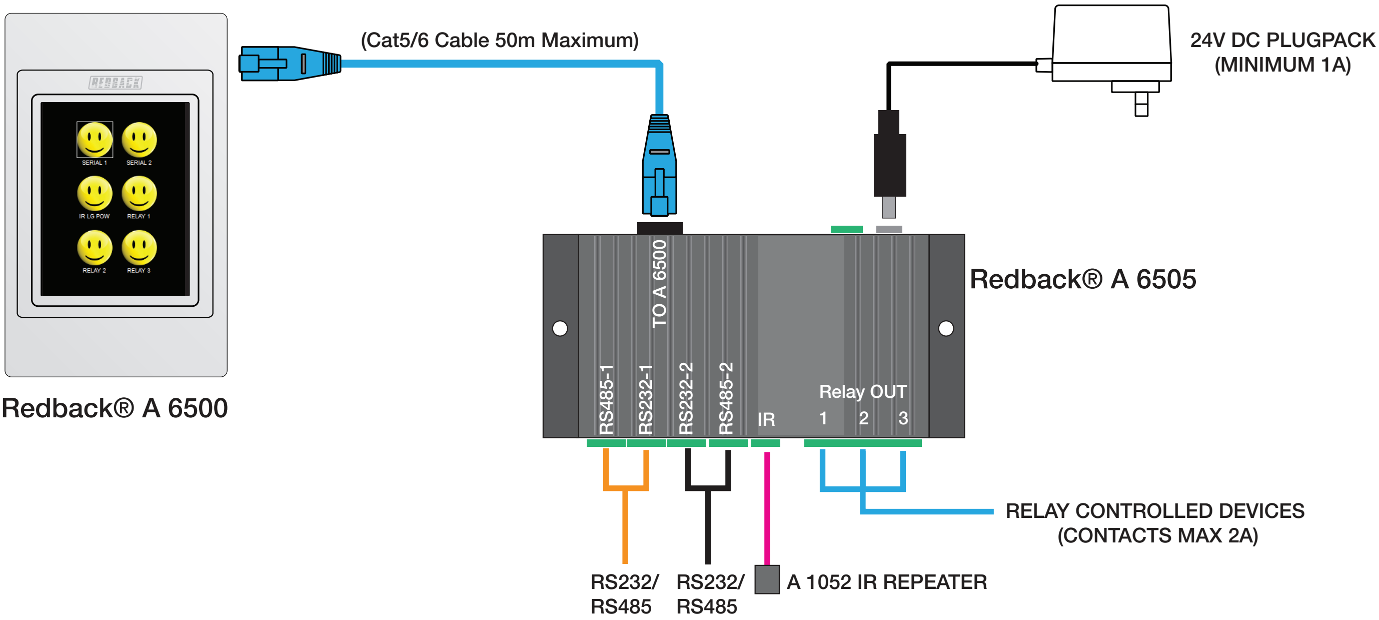
REDBACK
SERIAL 1
SERIAL 2
IR LG POW
RELAY 1
RELAY 2
RELAY 3
Redback® A 6500
(Cat5/6 Cable 50m Maximum)
24V DC PLUGPACK
(MINIMUM 1A)
TO A 6500
Redback® A 6505
RS485-1
RS232-1
RS232-2
RS485-2
IR
Relay OUT
1
2
3
RELAY CONTROLLED DEVICES
(CONTACTS MAX 2A)
RS232/
RS485
RS232/
RS485
A 1052 IR REPEATER

Fig 3.8

These buttons relate to the outputs of the A 6505 Serial Hub. When these buttons are pressed the corresponding output’s LED will illuminate as shown in the A 6505 rear panel diagram of figure 3.9.
NOTE: The Serial 1, Serial 2 and IR LED’s will flash sparodically.
This Default configuration is useful for testing purposes.

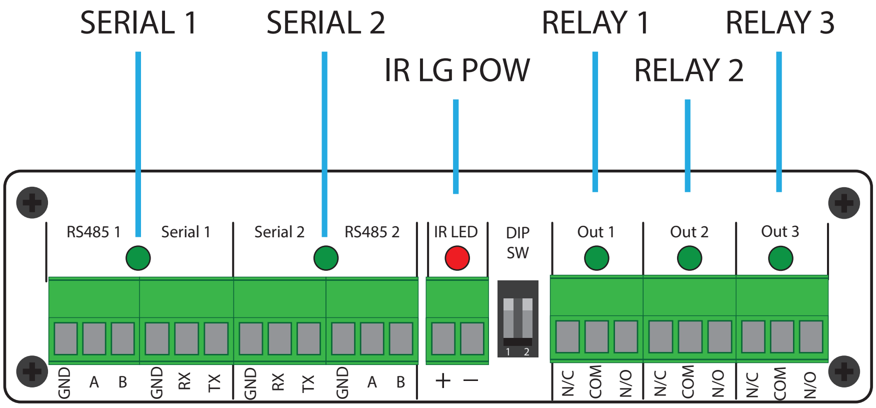
SERIAL 1
SERIAL 2
IR LG POW
RELAY 1
RELAY 2
RELAY 3
RS485 1
Serial 1
Serial 2
RS485 2
IR LED
DIP SW
Out 1
Out 2
Out 3
1 2
GND A B
GND RX TX
GND RX TX
GND A B
+ –
N/C COM N/O
N/C COM N/O
N/C COM N/O

Fig 3.9

Obviously this screen setup is not going to be applicable to any real world application. In the following section a Lecture Theatre Setup is outlined.

3.9 LECTURE THEATRE SETUP

Fig 3.10 Illustrates a simple configuration which may be used in a Lecture Theatre using a projector, powered projector screen, DVD player, laptop computer and the A 6500 wall plate and A 6505 relay hub.

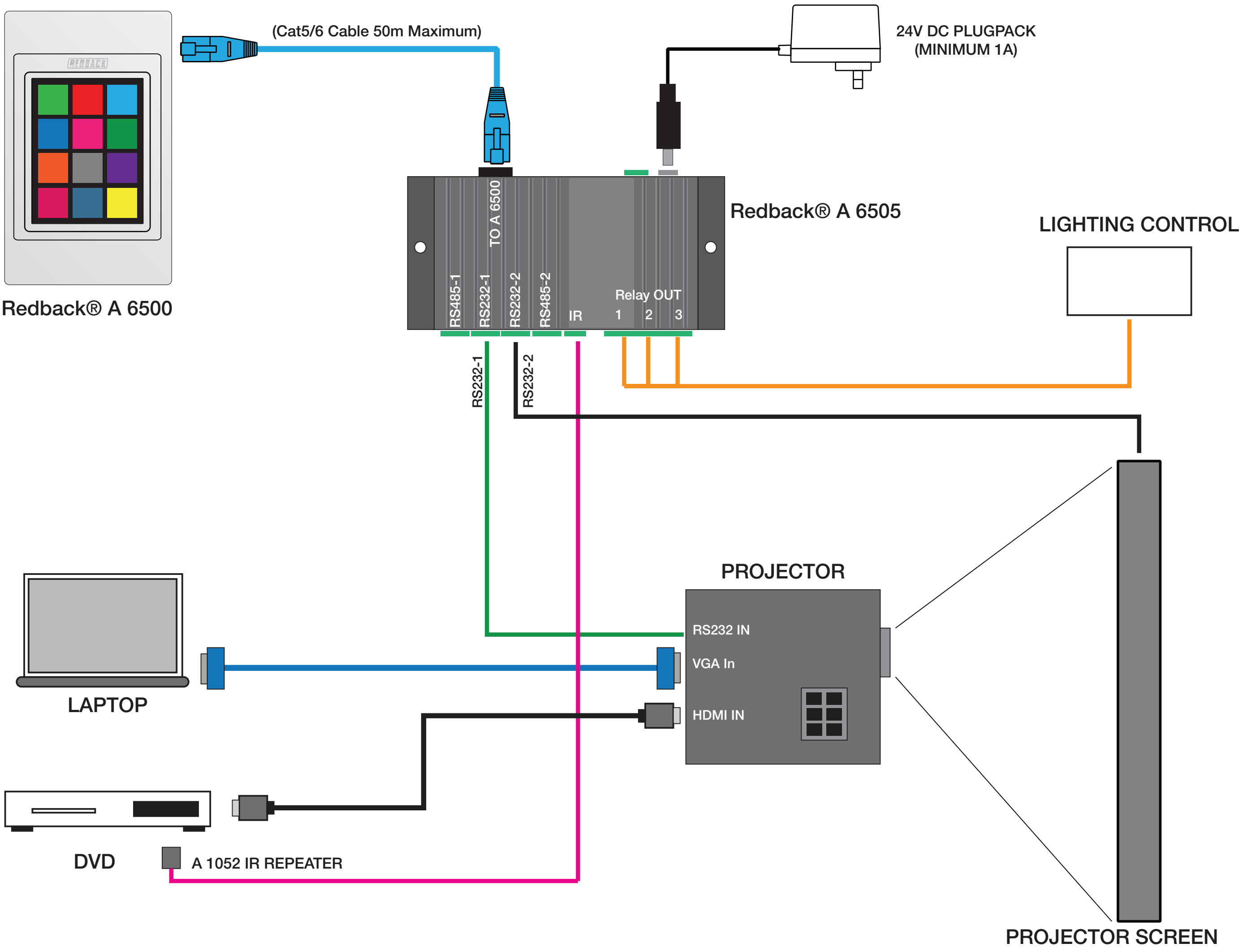
(Cat5/6 Cable 50m Maximum)
24V DC PLUGPACK
(MINIMUM 1A)
Redback® A 6500
Redback® A 6505
TO A 6500
RS485-1
RS232-1
RS232-2
RS485-2
IR
Relay OUT
1
2
3
LIGHTING CONTROL
RS232-1
RS232-2
PROJECTOR
RS232 IN
VGA In
HDMI IN
LAPTOP
DVD
A 1052 IR REPEATER
PROJECTOR SCREEN

Fig 3.10

Power and A/V Wiring: In this example the A 6500 wall plate is located at the lecturn and the A 6505 Relay Hub is situated in the ceiling space where power for the realy hub, projector and projector screen are located. The A 6500 Wall Plate is powered through the single Cat5/6 cable connected back to the A 6505. The laptop and DVD player are situated and powered at the lecturn and their corresponding VGA and HDMI output cabling is connected back to the projector.

Control Wiring: The projector is controlled by RS232 commands from the A 6505 serial output 1, the projector screen is controlled by RS232 commands from the A 6505 serial output 2. The RS232 control cabling requires only the TX and GND connection from the A 6505 and the RX and GND connection at the projector and projector screen. The DVD player is controlled by IR codes sent from the A 6505 to an IR repeater (such as Altronics A 1052). The lighting is controlled by the relay outputs of the A 6505 which are voltage free closing contacts. Figure 8 cable would be sufficient for all of these connections.

4.0 SYSTEM WIRING

4.1 RJ45 cabling configuration for connection between the A 6500 Wall Plate and the A 6505 Serial Hub (586A 'Straight through')

Components are connected using "pin to pin" configuration RJ45 data cabling as shown in fig 4.1. When installing ensure all connections are verified with a LAN cable tester before switching any system component on.

Failure to follow the correct wiring configuration may result in damage to system components.

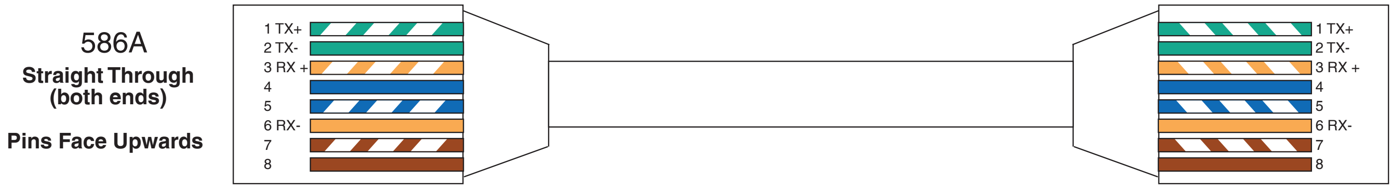

Fig 4.1

4.2 Serial wiring

RS232 Serial wiring from the Redback® A 6505 Serial Hub to the Redback® A 6510 or the Redback® A 6515
The RS232 control cabling requires only two connections from the output of the A 6505 Serial Hub to the input connector of the A 6510 or A 6515. The TX pin of the A 6505 is connected to the RX connection of the A 6510 or A 6515, and the GND terminals are connected together.

RS232 Serial wiring from Third Party Device to Redback® A 6510 or the Redback® A 6515
The RS232 control cabling requires only two connections from the output of the third party device to the input connector of the A 6510 or A 6515. The TX pin of the output device is connected to the RX connection of the A 6510 or A 6515, and the GND terminals are connected together.

RS485 Serial wiring from the Redback® A 6505 Serial Hub to the Redback® A 6510 or the Redback® A 6515
The RS485 control cabling requires three connections from the output of the A 6505 Serial Hub to the input connector of the A 6510 or A 6515. The "A" connection of the A 6505 is connected to the "A" connection of the A 6510 or A 6515, the "B" connection of the A 6505 is connected to the "B" connection of the A 6510 or A 6515 and the GND terminals are connected together.

RS485 Serial wiring from Third Party Device to Redback® A 6510 or the Redback® A 6515
The RS485 control cabling requires three connections from the output of the third party device to the input connector of the A 6510 or A 6515. The "A" pin of the output device is connected to the "A" connection of the A 6510 or A 6515, the "B" pin of the output device is connected to the "B" connection of the A 6510 or A 6515, and the GND terminals are connected together.

5.0 TROUBLE SHOOTING

SYMPTOMS	REMEDIES
A 6500 wall plate not powering up	Check Cat5e connection to A 6505/10/15 (refer fig 4.1)
A 6510 or A 6515 not accepting serial codes	Check DIP switches 1-3 are set correctly/check wiring
IR transmission not working	Check IR led wiring/check DIP switch 1 on A 6505

6.0 SPECIFICATIONS

A 6500 Wall Plate

Input connection: .... Micro USB (USB Keyboard)
Output connection: RJ45 8P8C
Data transmission: .... cat5e cabling max 50m
Wallplate:... Altronics Dual Cover
Dimensions: .... 72W x 116D x 13H
Power: .... Powered by A 6505/10/15 over Cat5e cable
Current Draw: 50mA
Weight: 0.075kg

A 6505 Serial Hub

INPUT CONNECTORS:
Power connection (24V DC): .... 2.1mm DC socket
.............Euroblock terminal
Data: RJ45 8P8C
OUTPUT CONNECTORS:
Relay (1-3) Switched Out: .... Screw Terminals
NOTE: Relays rated for low power, typical 24V DC switching
IR Out: .... Screw Terminals
Serial Out (RS232 & RS485): ....Screw Terminals
Dimensions: .... 90W x 131D x 30H
Current Draw: .... 50mA (idle)
.... 150mA (Max)
Weight: 0.18kg

A 6510 Distribution Box (12 Relay)

INPUT CONNECTORS:
Power connection (24V DC): .... 2.1mm DC socket
.............Euroblock terminal
Data: RJ45 8P8C
Serial In (RS232 & RS485): ....Screw Terminals
OUTPUT CONNECTORS:
Relay (1-12) Switched Out: .... Screw Terminals
NOTE: Relays rated for low power, typical 24V DC switching
Dimensions: .... 90W x 131D x 30H
Current Draw: .... 30mA (idle)
.... 250mA (Max)
Weight: 0.18kg

A 6515 Distribution Box (2 Relay)

INPUT CONNECTORS:
Power connection (24V DC): .... 2.1mm DC socket
.............Euroblock terminal
Data: RJ45 8P8C
Serial In (RS232 & RS485): ....Screw Terminals
OUTPUT CONNECTORS:
Relay (1-2) Switched Out: .... Screw Terminals
NOTE: Relays rated for low power, typical 24V DC switching
Dimensions: .... 75W x 133D x 47H
Current Draw: .... 30mA (idle)
.... 80mA (Max)
Weight: 0.19kg

* Specifications subject to change without notice

7.0 WARRANTY

REDBACK® is a registered trademark of Altronic Distributors Pty Ltd

Since 1976 Redback**®** amplifiers have been manufactured in Perth, Western Australia by Altronics. With over 40 years experience in the commercial audio industry, we offer consultants, installers and end users reliable products of high build quality with local product support. We believe there is significant added value for customers when purchasing an Australian made Redback**®** amplifier or PA product

Australian Made Status

All Redback house products made by Altronics will now be sporting the official Australian Made logo. Since starting manufacturing of commercial audio equipment in the mid 70's we have always taken pride in producing a quality local product.
The new adoption of the Australian Made logo will help us get the word out to local and export markets that our products carry the official compliance seal of the Australian Made campaign. We have always pushed our 'local is better' line in all of our marketing efforts, it's always an added boost when you are backed up by a widely recognised and respected icon.

Industry leading 10 year warranty.

There's a reason we have the industry leading DECADE warranty. It's because of a long tried and tested history of bulletproof reliability. We've heard PA contractors tell us they still see the original Redford amplifier still in service in schools - that's over 39 years of operation - and still going strong!

All Australian made Redback**®** products are covered by a 10 year warranty.

Should a product become faulty please contact us to obtain a return authorisation number. Please ensure you have all the relevant documentation on hand. We do not accept unauthorised returns. Proof of purchase is required so please retain your invoice.