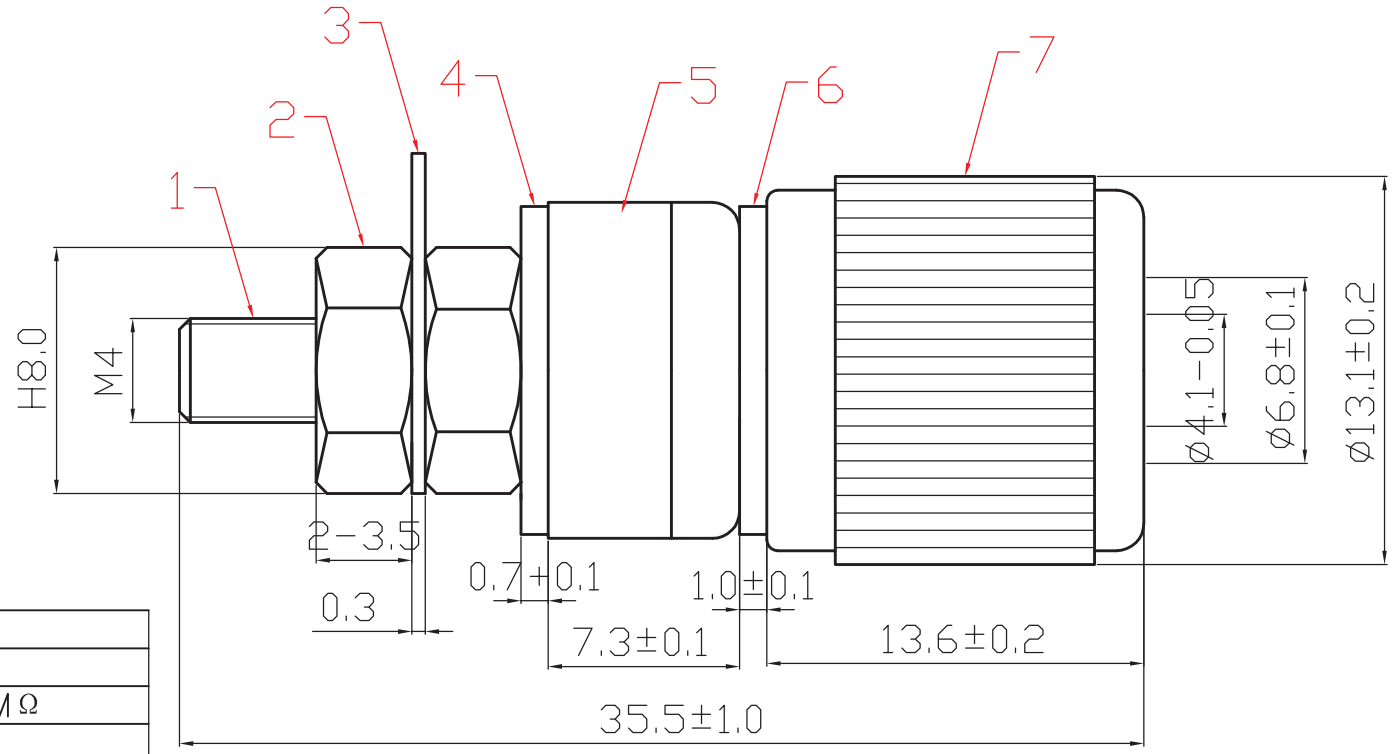

ELECTRICAL CHARACTERISTIC	
(1)	CONTACT RESISTANCE:≤20mΩ
(2)	INSULATION RESISTANCE: ≥10MΩ
(3)	WITHSTAND VOLTAGE:DC300V
(4)	CURRENT RATING:5A/DC150V
(5)	OPERATING TEMPERATURE:-30℃~60℃

ITEM	DESIGNATION	MATERIAL
7	SHELL	ABS
6	COPPER PATCH	Cu
5	PLASTIC HANDLE	ABS
4	WASHER	Cu
3	EARTHING PATCH	Cu
2	NUT	Zn
1	BODY	Cu

REV	PART NO.& SAMPLE NO.	DATE	BY
A			
B			

TOLERANCE	
0 - 10	±0.05
10 - 99	±0.5
100 - 999	±10.0
1000 - 9999	±100.00
10000 - 99999	±1000.00

SIGNATURES	DATE
DRAFT:	10.01.15
CHECKEO:	
APPROVAL:	

SHEET	SCALE	UNIT	REV
OF	1:1	mm	ø

ALTRONICS

TITLE	Binding Post,Medium Red, Black, Green, Yellow
PART NO.	P 9238, P 9240, P 9237, P 9241